Dimensions

External dimensions

Fig.A

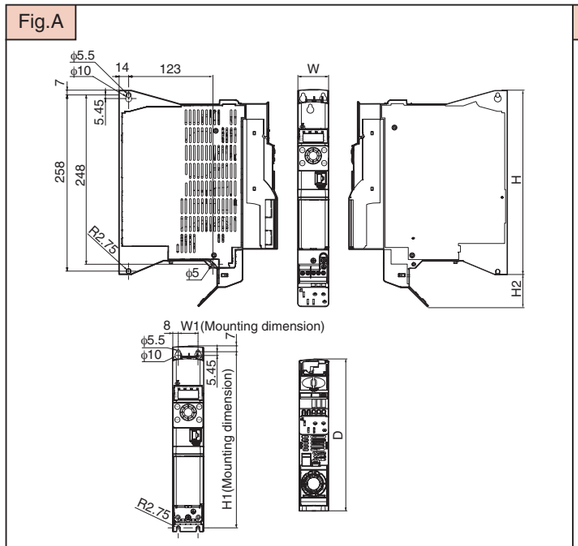

Fig.B

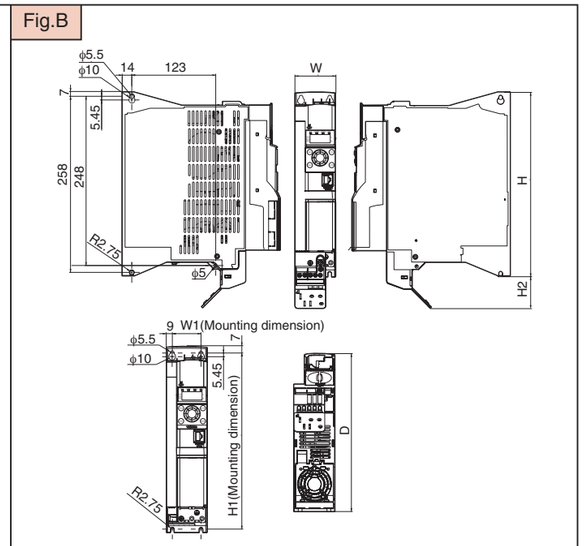

Fig.C

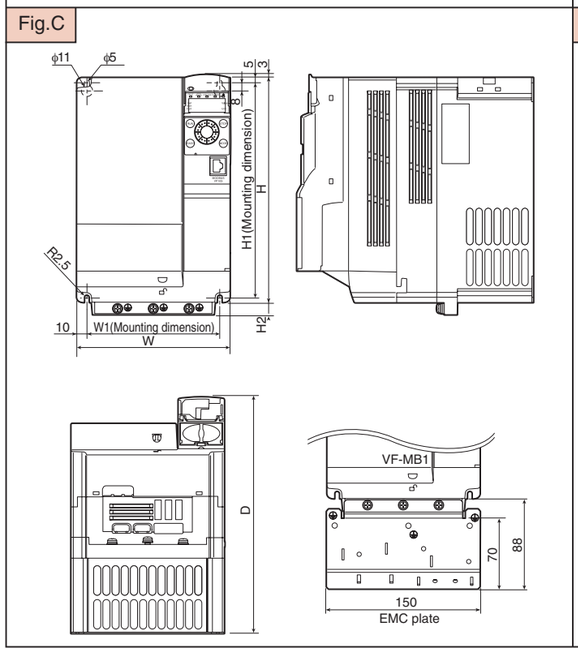

Fig.D

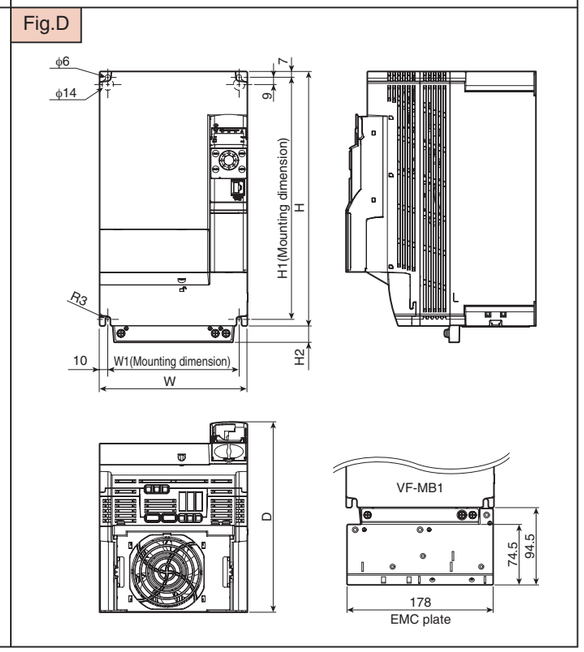

Voltage class	Applicable motor (kW)	Inverter type	Dimensions (mm)						Drawing	Approx. weight (kg)
			W	H	D	W1	H1	H2		
1-phase 240V	0.2	VFMB1S-2002PL	45	270	232	29	258	47	A	1.7
	0.4	VFMB1S-2004PL								
	0.75	VFMB1S-2007PL								1.8
	1.5	VFMB1S-2015PL	60			42			B	2.1
	2.2	VFMB1S-2022PL								2.2
3-phase 500V	0.4	VFMB1-4004PL	45	270	232	29	258	47	A	1.8
	0.75	VFMB1-4007PL								1.9
	1.5	VFMB1-4015PL								
	2.2	VFMB1-4022PL	60			42			B	2.2
	4.0	VFMB1-4037PL								2.4
	5.5	VFMB1-4055PL	150	220		130	210	12	C	4.3
	7.5	VFMB1-4075PL								
	11	VFMB1-4110PL	180	310		160	295	20	D	6.8
	15	VFMB1-4150PL								6.9

Note. H dimension in Fig.C is not included in the protuberance for operation panel.

Standard connection diagram

SINK (Negative)
(common:CC)

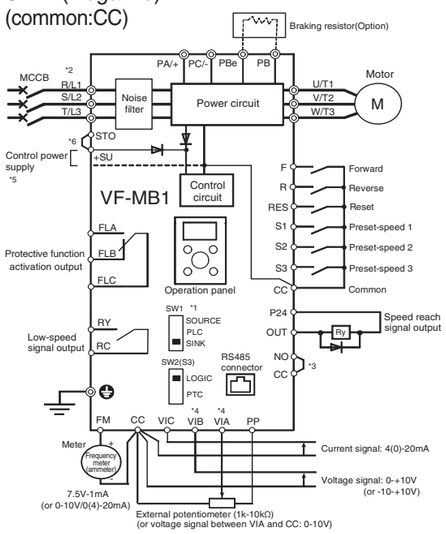

SOURCE (Positive)
(common:P24)

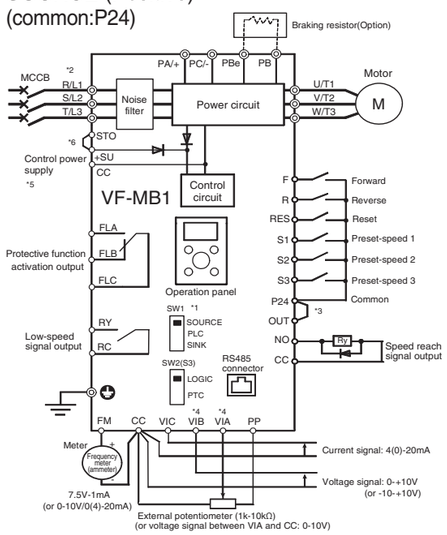

*1: Set the slide switch SW1 to sink side or source side.

*2: The T/L3 terminal is not provided for single-phase models.
Use the R/L1 and S/L2/N terminal as input terminals.

*3: When using the OUT output terminal in sink logic mode, short the NO and CC terminals.
When using the NO output terminal in source logic mode, short the P24 and OUT terminals.

*4: When VIA or VIB terminal is used as logic input terminal, set the parameter F 109.

*5: To supply control power from an external power supply for backing up the control power supplied from the inverter, an optional control power backup device (CPS002Z) is required. In such a case, the backup device is used at the same time with the internal power supply of the inverter.
The optional control power backup unit can be used with both 240V and 500V models.

*6: When STO terminal is used as compliance with safety standards, refer to instruction manual.

Power circuit terminal functions

Terminal symbol	Terminal function
⏚	Grounding terminal for connecting inverter. There are 3 terminals in total.
R/L1,S/L2,T/L3	240V class: Single-phase 200 to 240V-50/60Hz * Single-phase inputs are R/L1 and S/L2/N terminals. 500V class: Three-phase 380 to 500V-50/60Hz
U/T1,V/T2,W/T3	Connect to a three-phase motor.
PBe, PB	Connect to braking resistors. Change parameters F304, F305, F308, F309 if necessary.
PA/+, PC/-	These are a positive potential and negative potential terminals in the internal DC main circuit. DC common power can be input.

Control circuit terminal functions

Terminal symbol	Input / output	Function		Electrical specifications
F	Input	Multifunction programmable logic input	Shorting across F-CC causes forward rotation; open causes slow-down and stop. (When Standby ST is always ON) 3 different functions can be assigned.	No voltage logic input 24Vdc-5mA or less
R	Input		Shorting across R-CC causes reverse rotation; open causes slow-down and stop. (When Standby ST is always ON) 3 different functions can be assigned.	*Sink/Source and PLC selectable using slide switch SW1 (In case of sink logic is the left)
RES	Input		This inverter protective function is disabled if RES-CC is connected. Shorting RES-CC has no effect when the inverter is in a normal condition. 2 different functions can be assigned.	
S1	Input		Shorting across S1-CC causes preset speed operation. 2 different functions can be assigned.	
S2	Input		Shorting across S2-CC causes preset speed operation. By changing parameter F146 setting, this terminal can also be used as a pulse trains input terminal.	Pulse train input (S2) Pulse frequency range: 10pps~20kpps
S3	Input		Shorting across S3-CC causes preset speed operation. By changing slide switch SW2 and parameter F147 setting, this terminal can also be used as a PTC input terminal.	PTC input (S3) PTC type: PT100
CC	Common to Input / output	Control circuit's equipotential terminal (3 terminals)		
PP	Output	Analog power supply output		10Vdc (permissible load current: 10mA)
VIA	Input	Multifunction programmable analog input. Factory default setting: 0-10Vdc (1/1000 resolution) and 0-60Hz (0-50Hz) frequency input. By changing parameter F109 setting, this terminal can also be used as a multifunction programmable logic input terminal.		10Vdc (internal impedance: 30kΩ)
VIB	Input	Multifunction programmable analog input. Factory default setting: 0-10Vdc (1/1000 resolution) and 0-60Hz (0-50Hz) frequency input. The function can be changed to -10-+10V input by parameter F107=1 setting. By changing parameter F109 setting, this terminal can also be used as a multifunction programmable logic input terminal.		10Vdc (internal impedance: 30kΩ)
VIC	Input	Multifunction programmable analog input. 0-20mA (4-20mA) input.		4-20mA (internal impedance: 250Ω)
FM	Output	Multifunction programmable analog output. Standard default setting: output frequency. The function can be changed to 0-10Vdc voltage or 0-20mAdc (4-20mA) current output by parameter F681 setting.		1mAdc full-scale ammeter 0-10V DC volt meter 0-20mA (4-20mA) DC ammeter Permissible load resistance: 750Ω or less
P24	Output	24Vdc power output		24Vdc-100mA
	Input	This terminal can be used as a common terminal when an external power supply is used by changing SW1 to PLC side.		-
+SU	Input	DC power input terminal for operating the control circuit. Connect a control power backup device (option) between +SU and CC.		Voltage: 24Vdc±10% Current: 1A or more
	Output	It is used with STO for safety function. +SU and STO terminals are short-circuited by metal bar at factory setting.		-
STO	Input	When +SU and STO are short-circuited, the inverter is put into a standby state. (Factory setting) And when the circuit between them is opened, the motor is coasting stop. These terminals can be used for inter lock. This terminal is not a multifunction programmable input terminal.		Independently of SW1 ON: DC17V or more OFF: Less than DC12V (OFF: Coast stop)
OUT NO	Output	Multifunction programmable open collector output. Standard default settings detect and output speed reach signal. 2 different functions can be assigned. The NO terminal is an isoelectric output terminal. It is isolated from the CC terminal. By changing parameter F669 settings, these terminals can also be used as multifunction programmable pulse train output terminals.		Open collector output 24Vdc-100mA To output pulse trains, a current of 10mA or more needs to be passed. Pulse frequency range: 10pps~2kpps
FLA FLB FLC	Output	Multifunction programmable relay logic output. Detects the operation of the inverter's protection function. (Standard default setting) Contact across FLA-FLC is closed and FLB-FLC is opened during protection function operation.		Max. switching capacity250Vac-2A (cosϕ=1): at resistive load 30Vdc-1A 250Vac-1A (cosϕ=0.4) Min. permissible load 5Vdc-100mA 24Vdc-5mA
RY RC	Output	Multifunction programmable relay contact output. Standard default settings detect and output low-speed signal output frequencies. 2 different functions can be assigned.		